DS-6211 Lite Digital Trunking System

CMU User Guide



Copyright Information

Hytera is the trademark or registered trademark of Hytera Communications Corporation Limited (the Company) in People's Republic of China (PRC) and/or other countries or areas. The Company retains the ownership of its trademarks and product names. All other trademarks and/or product names that may be used in this manual are properties of their respective owners.

The product described in this manual may include the Company's computer programs stored in memory or other media. Laws in PRC and/or other countries or areas protect the exclusive rights of the Company with respect to its computer programs. The purchase of this product shall not be deemed to grant, either directly or by implication, any rights to the purchaser regarding the Company's computer programs. The Company's computer programs may not be copied, modified, distributed, decompiled, or reverse-engineered in any manner without the prior written consent of the Company.

Disclaimer

The Company endeavors to achieve the accuracy and completeness of this manual, but no warranty of accuracy or reliability is given. All the specifications and designs are subject to change without notice due to continuous technological development. No part of this manual may be copied, modified, translated, or distributed in any manner without the prior written consent of the Company.

We do not guarantee, for any particular purpose, the accuracy, validity, timeliness, legitimacy or completeness of the third-party products and contents involved in this manual.

If you have any suggestions or would like to receive more information, please visit our website at: http://www.hytera.com.

Contents

Documentation Information **1**
1. Introduction **2**
1.1 Product Overview 2
1.2 Specifications 3
2. Parts Description **5**
2.1 Front Panel 5
2.2 LED Indicator 5
2.3 Rear Panel 6
2.4 Description of Communication Interface 7
2.4.1 Serial Port 7
2.4.2 I/O Interface 7
3. Installation and Configuration **9**
3.1 Installing the CMU 9
3.2 Switching On/Off the CMU 9
3.3 Configuring and Monitoring the CMU 9
3.3.1 Configuring the CMU Parameter 9
3.3.2 Configuring the CMU Port 11
3.3.3 Viewing the CMU Alarm 11
4. Abbreviation **12**

Documentation Information

This section describes the conventions and revision history of this document.

Documentation Conventions

Icon Conventions

Icon	Description
 **Tip**	Indicates information that can help you make better use of your product.
 **Note**	Indicates references that can further describe the related topics.
 **Caution**	Indicates situations that could cause data loss or equipment damage.
 **Warning**	Indicates situations that could cause minor personal injury.
 **Danger**	Indicates situations that could cause major personal injury or even death.

Notation Conventions

Item	Description
“ ”	The quotation marks enclose the name of a software interface element. For example, click “OK”.
Bold	The text in boldface denotes the name of a hardware button. For example, press the **PTT** key.
>	The symbol directs you to access a multi-level menu. For example, to select “New” from the “File” menu, we will describe it as follows: File -> New.

Revision History

Document Version	Release Version	Release Date	Description
00	V00	February 2017	Initial release.

1. Introduction

This document describes the function, specification, installation, and operation of the CMU-P200.

1.1 Product Overview

The central monitor unit (CMU) monitors internal units and environment of the base station, outputs alarm signal, and uploads the monitoring information. Its block diagram is shown in the following figure.

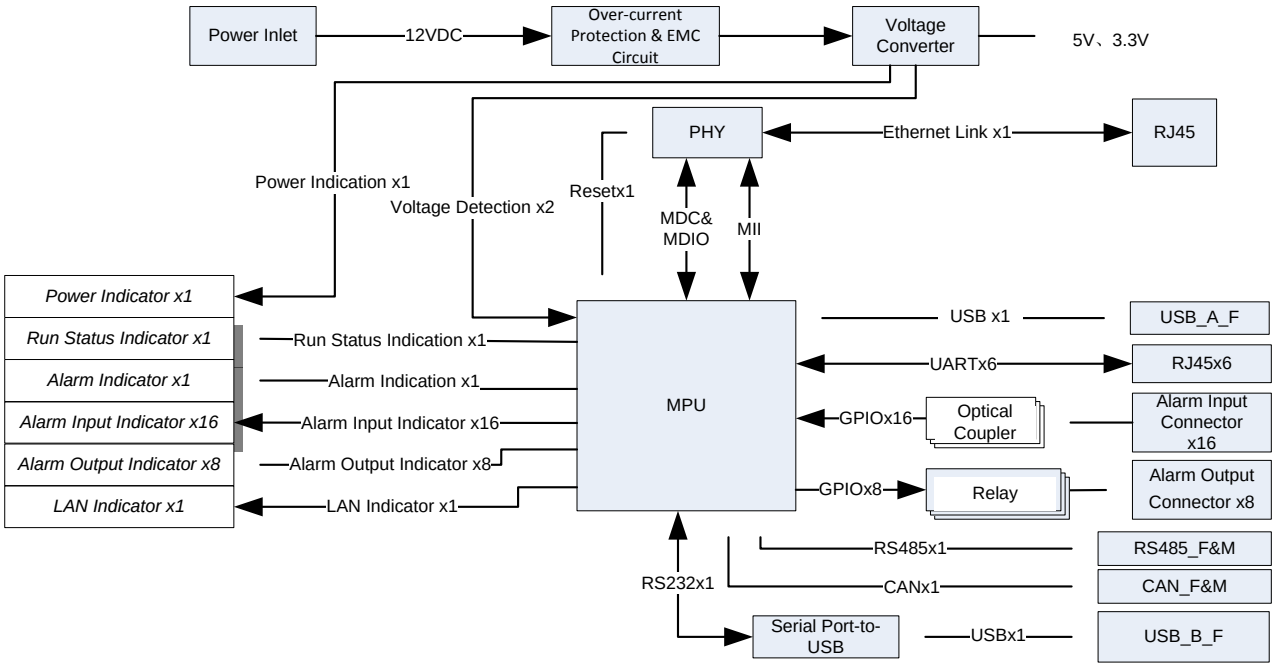

The connection between CMU and other units is shown in the following figure.

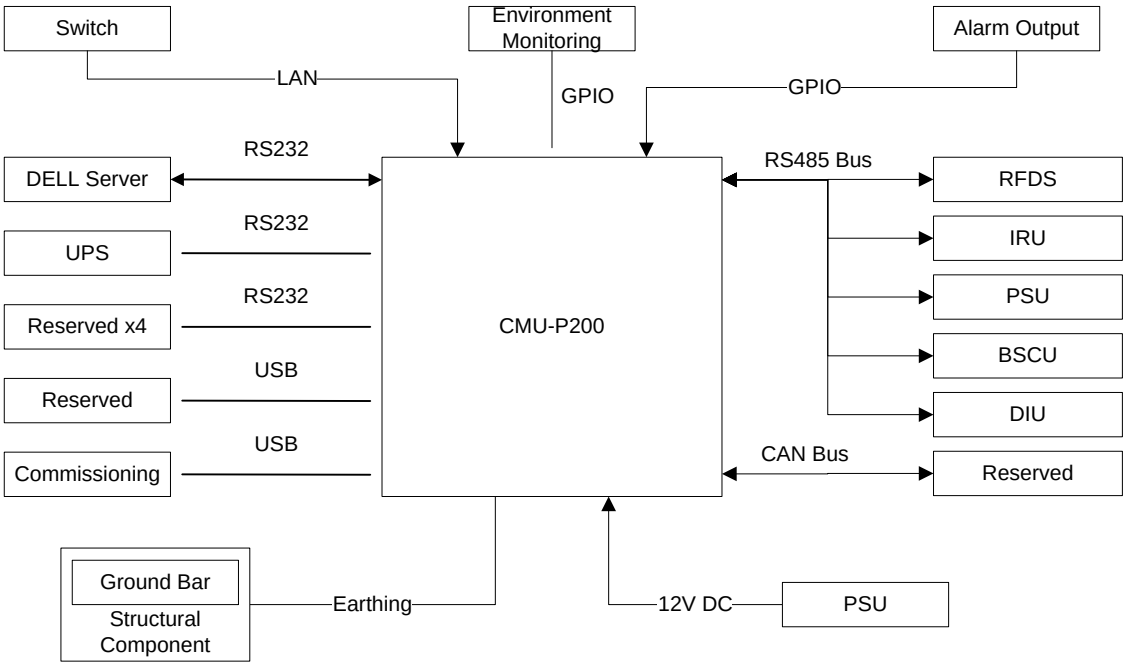

1.2 Specifications

Item		Specification
Electric	Input Voltage	11 V DC to 14 V DC
	Input Current	≤2 A
	Local Maintenance Interface	USB2.0
	RS-485 Communication Performance	Max. Baud Rate: 115.2 Kbps
	CAN Communication Performance	Reserved
	RS232 Communication Performance	Communication mode and Baud rate are configurable.
	Network Interface	10/100 Mbps, self-adaptive
	Max Current for Alarm Output Interface	5 A/AC 250 V, 5 A/DC 30 V
	Withstand Voltage for Alarm Output Interface	1500 V/10 mA
	Alarm Input Interface	Alarm can be detected when the input voltage difference is 2 V to 24 V.
		Alarm cannot be detected when the input voltage difference is not greater than 0.8 V.
Environmental	Normal Operating Temperature	+15°C to +35°C
	Extreme Operating Temperature	-30°C to +60°C
	Storage Temperature	-40°C to +85°C
	Normal Relative Humidity	20% to 75% RH

Item			Specification
	Extreme Relative Humidity		5% to 95% RH
EMC	Standard Compliance		EN55022, IEC61000-4
	EMS	ESD	Level 3
		Radiated Immunity	Level 2
		Surge	Level 3
	EMI	Conducted Spurious Emission	Level B
		Radiated Spurious Emission	Level B
Dimensions (H x W x D)			44.5 mm x 482.6 mm x 300 mm
Weight			3.75 kg

2. Parts Description

2.1 Front Panel

The front panel of CMU is shown in the following figure and described in the following table.

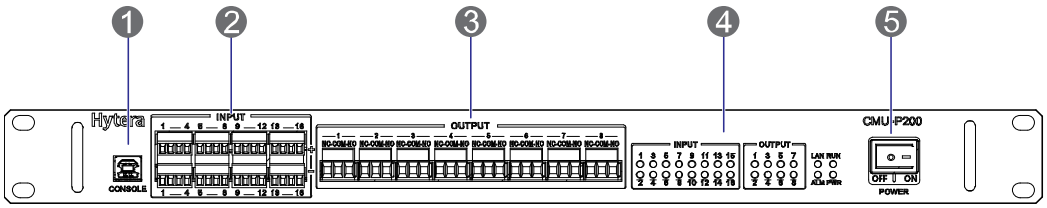

No.	Name	Description	Remarks
1	Console	Used for local commissioning	USB2.0, type B, female, maximum rate: 115.2 kbps.
2	Input	Environment monitoring input	x 16
3	Output	Alarm output	x 8
4	LED	LED indicator	/
5	POWER	Power switch	12 V DC, ≤2 A

2.2 LED Indicator

The indicators on the front panel of CMU are described in the following table.

LED Indicator	Color	Status	Description
PWR	Green	Glowing solidly	The CMU is supplied with power normally.
		Off	The CMU is not supplied with power normally.
RUN	Green	Flashing	The CMU is running normally.
		Glowing solidly/Off	The CMU is initializing or malfunctions.
ALM	Red	Glowing solidly	The CMU malfunctions.

LED Indicator	Color	Status	Description
		Off	The CMU is running normally.
LAN	Green	Flashing	Data is being transferred.
		Off	No data is being transferred.
INPUT1 to 16	Green	Glowing solidly	There is alarm input.
		Off	There is no alarm input.
OUTPUT1 to 8	Green	Glowing solidly	There is alarm output.
		Off	There is no alarm output.

2.3 Rear Panel

The rear panel of CMU is shown in the following figure and described in the following table.

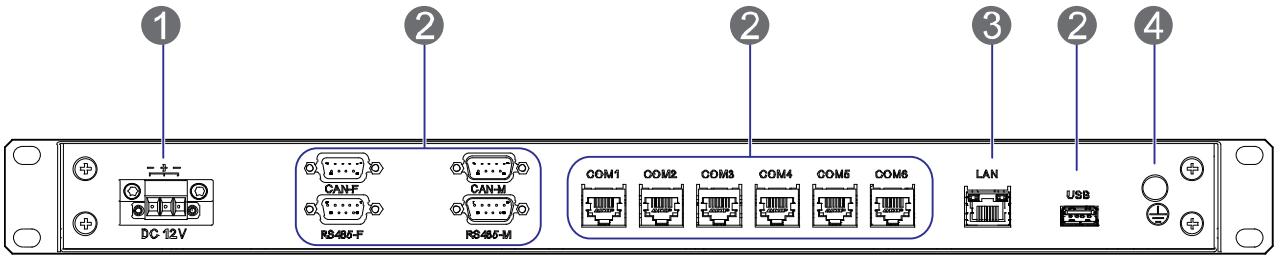

No.	Name	Description	Remarks
1	DC 12V_IN	Power inlet	Power input: 12 V DC
2	RS485_F/M	Monitoring interface	115.2Kbps, DB9, male x 1, female x 1
	CAN_ F/M		DB9, male x 1, female x 1
	COM1–COM6		RJ45, x 6
	USB		USB2.0, type A, female, x 1, full-speed mode
3	LAN	Data uploading interface	RJ45, x 1, 10/100 Mbps

No.	Name	Description	Remarks
4	⏚	Grounding	≤0.1 Ω, ≥2.5 mm^2, x 1, screw terminal

2.4 Description of Communication Interface

The CMU can be connected to external devices through the communication interfaces for monitoring and alarm processing. In general, the communication interfaces are divided into two types. One type is input/output interface, and the other type is serial port including RS-485, CAN, and COM. For the serial port, only the data link layer and physical layer are defined. These communication interfaces are described in the following table.

Item	Description
LAN	Reserved.
Input	Connected to external device for input.
Output	Connected to external device for output.
RS485	For communication with MPU when the model of base station control unit is BSC623 or BSC-P2B00.
CAN	Reserved.
COM	One for communication with Agent when the model of base station control unit is a DELL server. One for receiving input from UPS. Other four are reserved.
USB	For commissioning.

2.4.1 Serial Port

The protocols for the serial port protocol are Hytera's proprietary protocols. The external devices shall comfort to such proprietary protocols.

2.4.2 I/O Interface

Based on the variation in level of the I/O interfaces, an alarm is generated and reported to the network management system.

2.4.2.1 Input Interface

The positive (+) and negative (-) are connected to the positive (+) and negative (-) of the external device respectively. The level is determined based on voltage difference between CMU and the external device. A high level is generated when the voltage difference ranges from 2 V to 4 V, and a low level is generated when the voltage is not greater than 0.8 V.

2.4.2.2 Output Interface

By default, NC and COM are connected, while COM and NO are disconnected. The maximum current capacity of the output interface is 5 A.

3. Installation and Configuration

3.1 Installing the CMU

For installation of the CMU, refer to *DS-6211 Lite Digital Trunking System Base Station Hardware Installation Guide*.

3.2 Switching On/Off the CMU

To turn on the CMU, toggle the power switch to the **ON** position.

To turn off the CMU, toggle the power switch to the **OFF** position.

3.3 Configuring and Monitoring the CMU

With the network management client (NMC), you can configure the input and output interfaces of the CMU.

3.3.1 Configuring the CMU Parameter

1. Start the NMC, double click the BS icon in the topological diagram. The BS block diagram appears.
2. Right-click the CMU in the block diagram. The configuration dialogue appears.

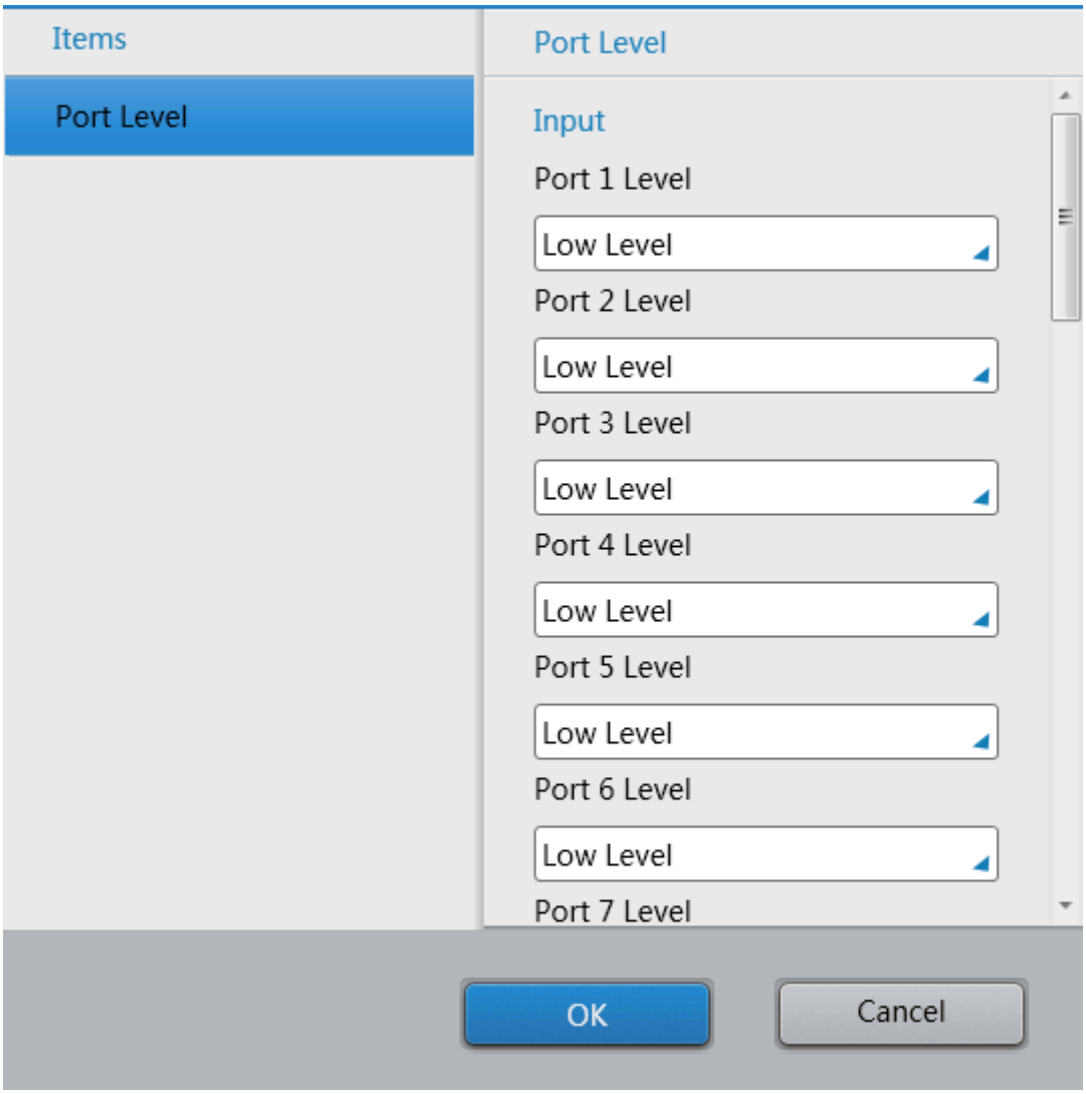

3. Configure the parameters described in the following table.

Parameter	Description	Remarks
Input Port 1-16 Level	Level status of the CMU input port.	Select from the drop-down list. The options include “Low” and “High”. The default is “Low”.
Output Port 1-8 Level	Level status of the CMU output port.	Select from the drop-down list. Configure The options include “Low” and “High”. The default is “Low”.

4. Click “OK”.

3.3.2 Configuring the CMU Port

1. Right-click the CMU in the block diagram of the BS and select “Configure CMU Port”. The configuration dialogue appears.

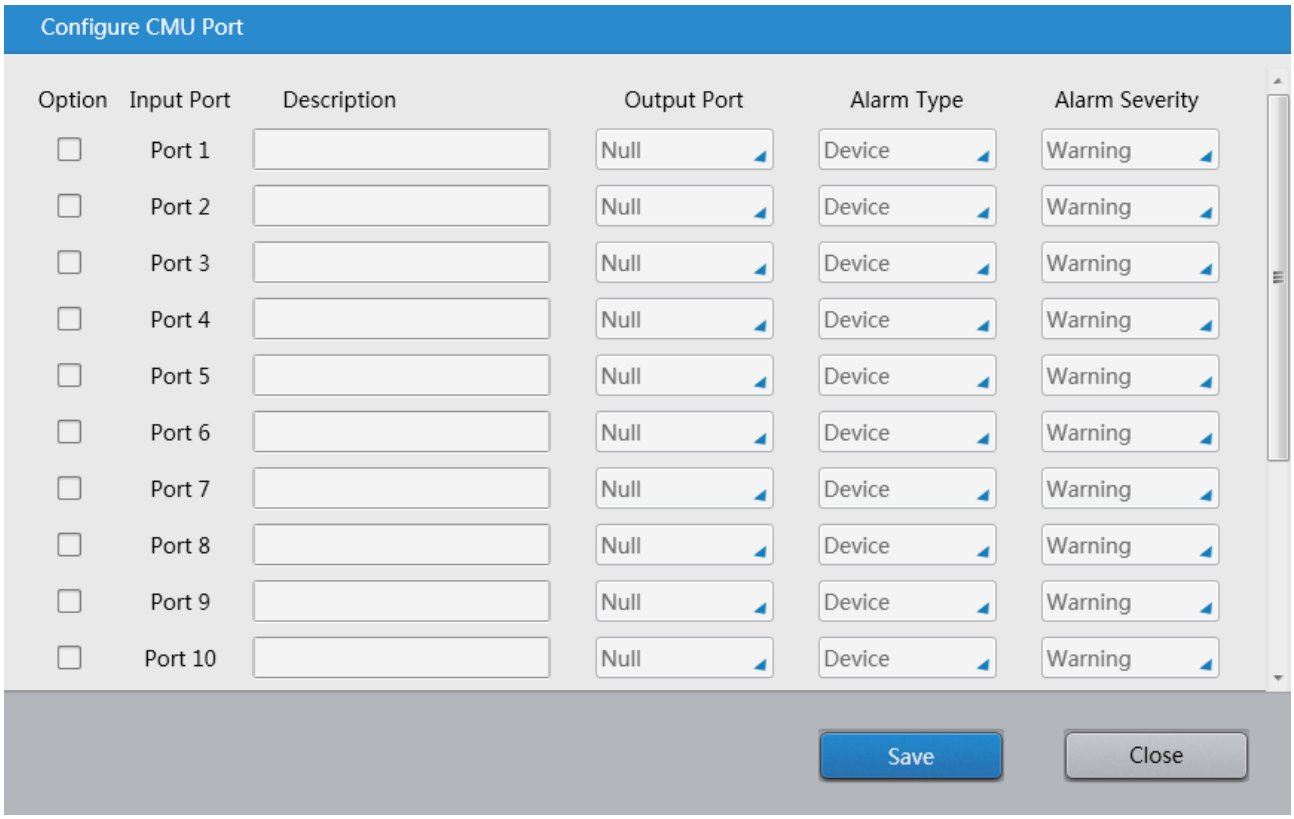

2. Check the port to be configured, enter the alarm description, and select the output port, alarm type and alarm severity.

> **Note**
> It is not allowed to modify “Description”, “Alarm Type”, and “Alarm Level” for fixed ports 17 to 24.

3. Click “Save”.

3.3.3 Viewing the CMU Alarm

To locate alarm(s) in the CMU, right-click the CMU in the block diagram of the BS and select “View Alarm”. Then the pane displaying all CMU alarms appears.

4. Abbreviation

Abbreviation	Full Name
CMU	Central Monitor Unit
MPU	Micro Processor Unit
PSU	Power Supply Unit
UPS	Uninterruptible Power System

Hytera
is the trademark or registered trademark of Hytera Communications Corporation Limited.
© 2017 Hytera Communications Corporation Limited. All Rights Reserved.
Address: Hytera Tower, Hi-Tech Industrial Park North, 9108 # Beihuan Road, Nanshan District, Shenzhen, People's Republic of China
Postcode: 518057
http://www.hytera.com